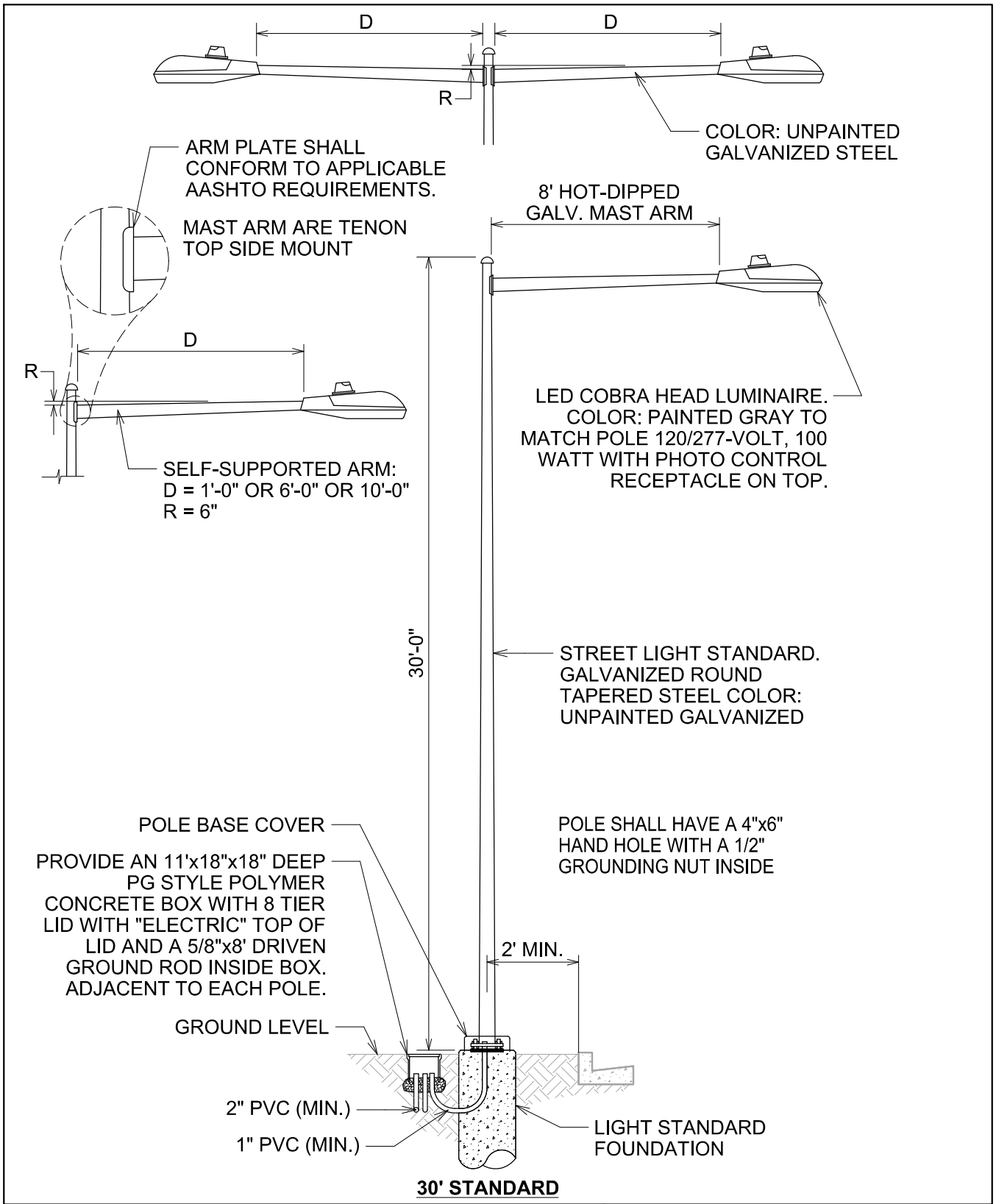

30' STANDARD

City of BRENHAM

TYPICAL STREET LIGHT STANDARD DETAILS

STANDARD CONSTRUCTION DETAILS

DATE: 07/20/21	REVISED DATE: 07/20/21

SGN - 2